Architecture – FF15
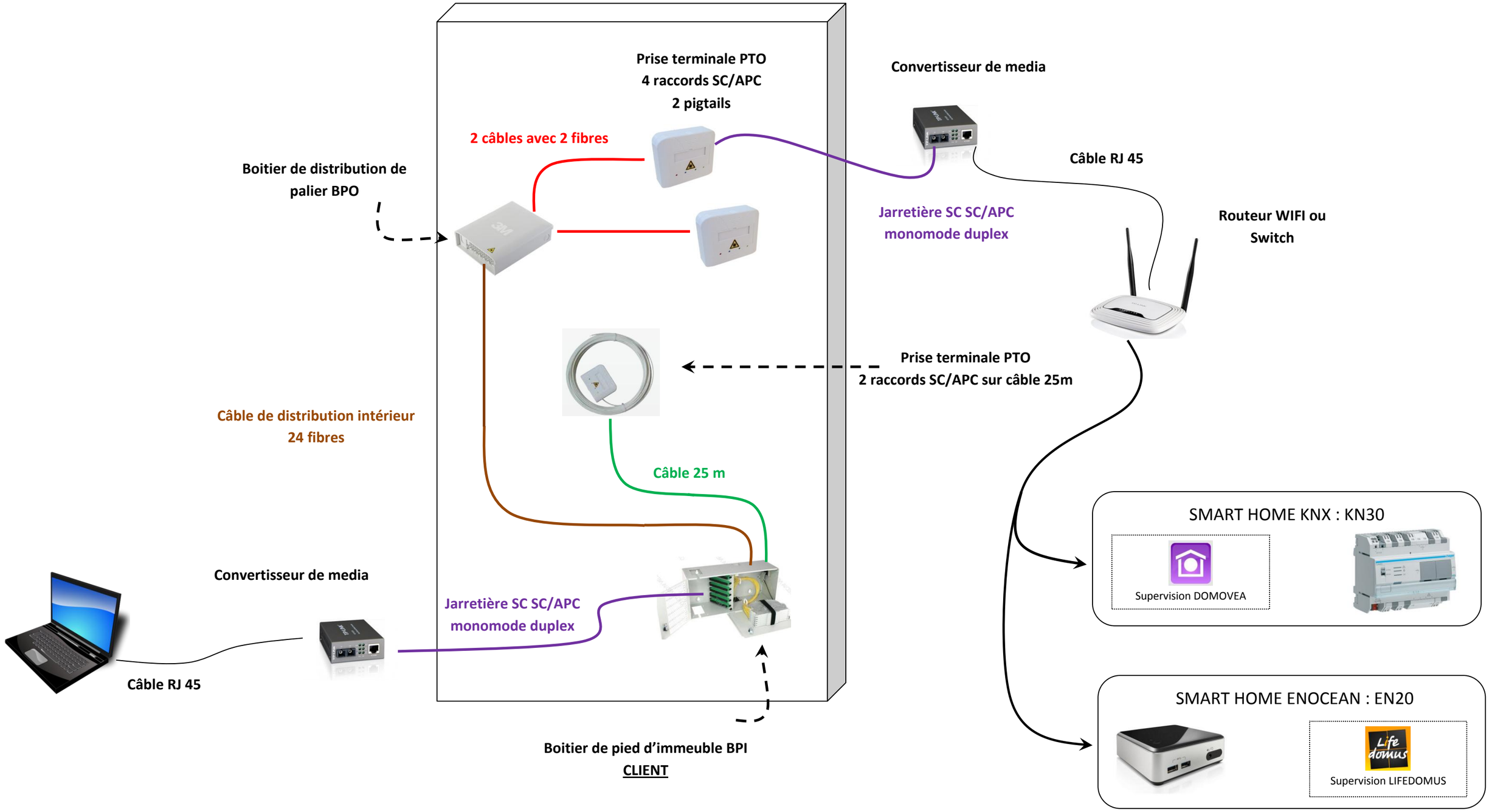
Structure